Statistics & Data Science major Prerequisite Flow Chart

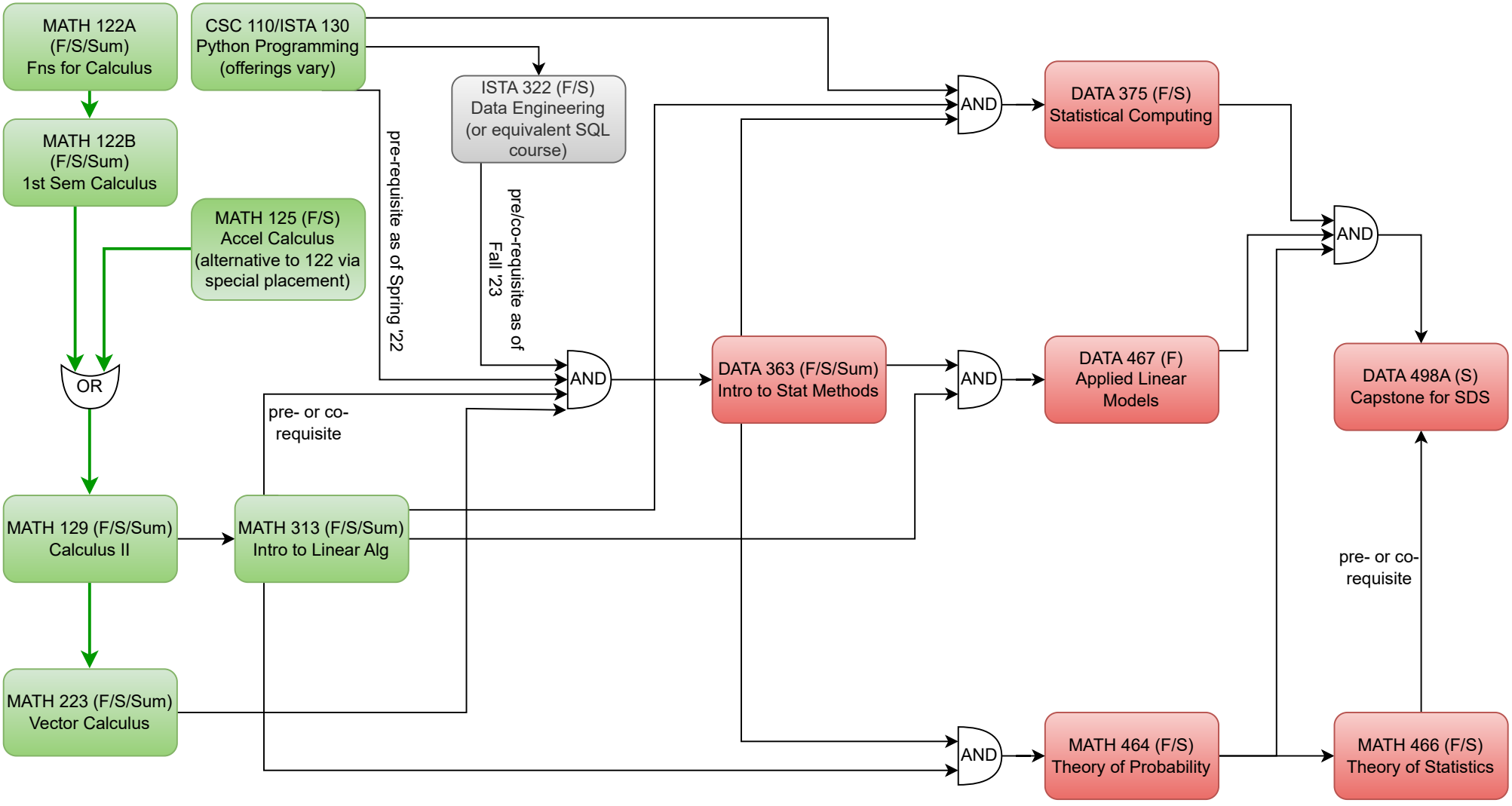

All courses listed are required, including one DATA elective course (see official requirements for list of available courses).

→ = C or better required in prerequisite

= Required for either SDS or Math major

= Required for SDS major

= Required pre/co-requisite starting Fall 2023; strongly recommended for Spring/Summer '22